VINCENT
Leermiddelen
Scientific

VDG generator

F370060

Introduction

Van de Graaff's band generator is used to generate very high voltages (DC) with low currents so that safe electrostatic experiments can be carried out

Description/Use

The generator is equipped with a hollow metal conductor dome (A) - with plug for peripheral connections (I) - from which the top half can be easily removed so that you can connect to the "jagged" electrode
(J) and the upper "belt pulley" (H). If you want to remove the tyre, first undo the two screws on the electrode (J).
Static electricity is generated by the 'non-conductive belt' (G) running over two axes (H&F). The lower band roller/axle (F) is driven by a motor (E)- connected to 230 V AC. The sphere (A) is mounted on a column (B) The switch (D) turns the belt generator on/off and the rotary knob (C) regulates the speed.

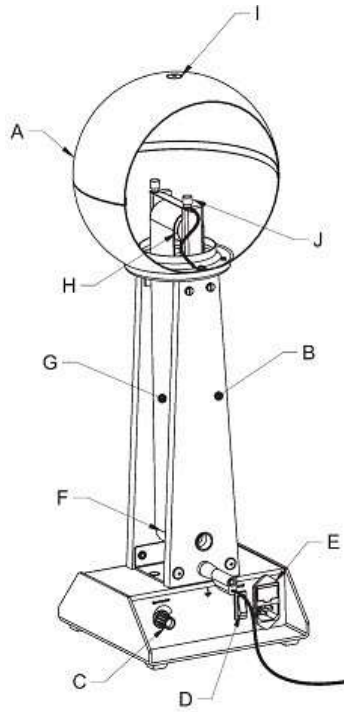

Maintenance, warnings & tips

- AIR MOISTURE is a general problem for the operation of the belt generator!
- The belt must never touch the fine mesh on the underside or the jagged electrode in the dome.
- The dome must be kept clean! Do not use alcohol or other substances. Hair & dust lead to a significant voltage drop
- The tyre must also be kept dry and clean. If necessary, use a hair dryer. Always wear gloves when touching the tyre.
- As electromagnetic signals are generated, this device may interfere with other electronic devices.
- Technical data: diameter dome 220mm, Voltage 230V AC, height 560mm, width 195mm

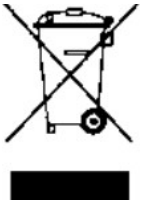

To all EU residents. Important environmental information regarding this product. This symbol indicates that if this appliance is disposed of at the end of its lifecycle, it may cause damage to the environment.

Vincent Leermiddelen Scientific
Tel: 03/239 49 62 Fax: 03/230 78 87